BMH SOLUTIONS

MADE IN KAZAKHSTAN

CONVEYOR PROTECTION SWITCHES · CPS SERIES

POSITIVE STOP.
ANY POINT. ANY BELT.

Heavy-duty pull-cord and limit switches for mining conveyors. Built for dust, frost and round-the-clock duty, made and backed in Kazakhstan.



PS-31 · EMERGENCY PULL-CORD



LS-32 · TRIPPER / LIMIT

BUILT FOR CONVEYORS THAT NEVER STOP.

A rugged cast-aluminium housing, a dual-cam mechanism with separate alarm and stop contacts, and a terminal board that makes wiring quick. Install it, wire it and rely on it for years — in open pits, crushing plants and stockyards.

2 in 1
One platform
One housing and one set of spares for both models

-45 °C
Built for the steppe
Rated −45 … +85 °C, IP65 cast housing

2 + 2
Alarm + stop
2 NO + 2 NC positive-break contacts

₸
Local supply
Prices in tenge, stock and service in Astana

MADE IN KAZAKHSTAN
Designed, machined and assembled by BMH Solutions, Astana

bmh.kz
+7 702 245 00 32

SAFETY OF PEOPLE

PEOPLE FIRST. THE BELT CAN WAIT.

Most conveyor injuries happen at pulleys, idlers and transfer points — often during cleaning, inspection or clearing a blockage. CPS switches are built around one idea: anyone who sees danger must be able to stop the belt instantly, and nobody can restart it while people are still at risk.

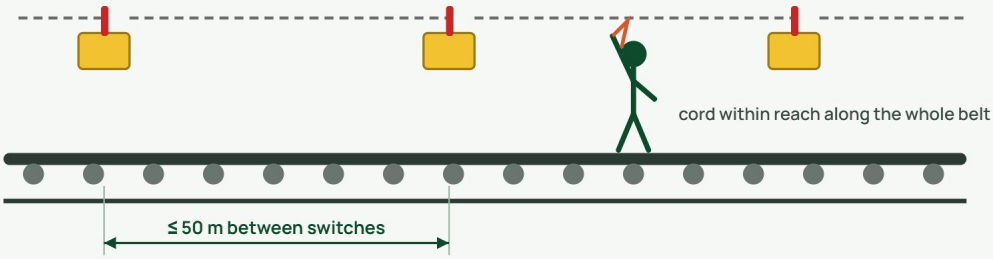

Pull-cord switches along the walkway: the cord is within reach at every point of the conveyor.

STOP FROM ANYWHERE

One pull on the cord, at any point along the conveyor and from either side, stops the belt.

LATCHED UNTIL RESET

After a trip the switch stays locked. The conveyor cannot be restarted remotely — only by hand at the switch.

POSITIVE-BREAK CONTACTS

Stop contacts are forced open mechanically by the cam, not by a spring alone.

WARNING, THEN STOP

Separate alarm and stop circuits: the operator is warned before the conveyor is shut down.

FAIL-SAFE WIRING

Wired as a normally closed loop: a cut cable or loose terminal also stops the conveyor.

EASY TO FIND

Safety-yellow housing and red lever stand out in dust, steam and poor light.

AN EMERGENCY STOP IS NOT AN ISOLATION DEVICE

Pull-cord and limit switches stop the conveyor in an emergency. They do not replace lock-out / tag-out. Isolate and lock the drive before any maintenance, cleaning or work on the belt.

GOOD PRACTICE ON SITE

- Fit pull-cord switches along the full length of every walkway, on both sides where people work.
- Check cord tension and test each switch as part of routine inspections.
- After a trip, find the cause before resetting the switch and restarting.
- Train every shift: where the cords are, how to stop, who may reset.

MODEL PS-31 · ONE PULL. FULL STOP.

EMERGENCY PULL-CORD SWITCH



The PS-31 is an emergency stop for belt conveyors and other long machines. A steel cord runs alongside the belt and is fixed to the switch lever on one or both sides, so anyone along the line can stop the conveyor with a single pull.

HOW IT WORKS

A pull on the cord turns the lever and the actuating shaft. At 18° two cams operate the alarm and shut-down micro-switches at the same moment, and the mechanism latches in the tripped position.

The latch can only be released with the reset lever on the switch itself. The conveyor cannot be restarted remotely while people are working on it.

INSTALLATION

We recommend one switch for every 50 m of conveyor. The lever can be set for horizontal, vertical or inclined mounting. A complete cord kit is available: tension springs, thimbles, eye nuts, wire-rope clamps and steel cord.

OVERALL DIMENSIONS, MM

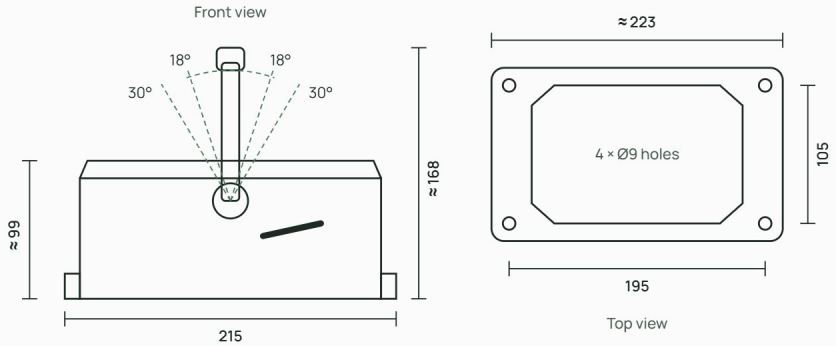

KEY DATA

Actuation	Pull cord, either side
Trip angle	18° ± 2°
Max. lever travel	30° ± 2°
Latch	Mechanical, manual reset
Contacts	2 NO + 2 NC
Catalogue No.	BMH-CPS-31-M20-S
Mounting	4 × Ø9 mm, 195 × 105 mm
Cable entries	3 × M20×1.5
Weight	≈ 4.3 kg
Spacing	1 switch per 50 m

TERMINAL BOARD

ALARM				SHUT-DOWN				SPARE	
1	2	3	4	5	6	7	8	9	10
NO 13–14		NC 21–22		NO 13–14		NC 21–22			

Alarm and shut-down contacts are switched by separate cams; both operate together at 18°. Terminals are numbered 1–10 for quick, error-free wiring.

MODEL LS-32 · EVERY POSITION. EVERY TIME.

TRIPPER / LIMIT SWITCH



The LS-32 is a heavy-duty limit switch with a roller lever. Its usual job is to report the position of a tripper car on a conveyor with several discharge points. It suits any travelling equipment that needs a robust, mechanically actuated position signal.

HOW IT WORKS

When the roller meets a fixed cam or stop, the lever and shaft rotate. At 18° two cams operate the alarm and stop micro-switches together. The lever can swing up to about 65° either way, so overtravel does not damage the switch.

The switch works in both directions of travel. The lever can be refitted on the shaft for horizontal, vertical or inclined mounting.

INSTALLATION

Mount the switch on the conveyor structure with the roller in line with the cam on the moving equipment. The housing, mounting holes and cable entries are the same as on the PS-31, so one set of spares serves both models.

OVERALL DIMENSIONS, MM

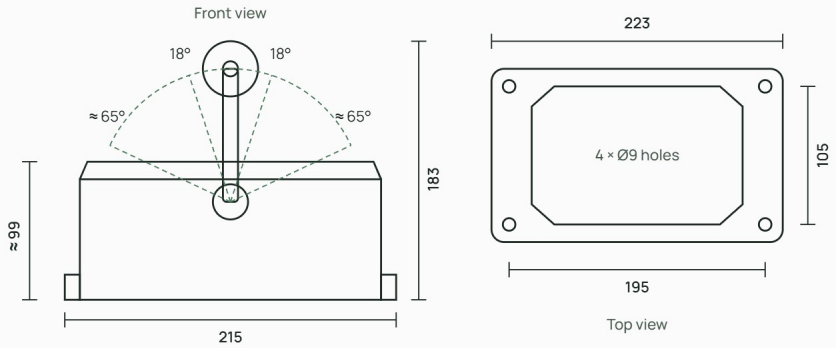

KEY DATA

Actuation	Roller lever, both directions
Operating angle	18° ± 2°
Max. lever travel	≈ 65° each way
Roller	Ø50 mm
Contacts	2 NO + 2 NC
Catalogue No.	BMH-CPS-32-M20-S
Mounting	4 × Ø9 mm, 195 × 105 mm
Cable entries	3 × M20×1.5
Weight	≈ 3.5 kg
Typical use	Tripper car position

TERMINAL BOARD

ALARM				STOP				SPARE	
1	2	3	4	5	6	7	8	9	10
NO 13–14		NC 21–22		NO 13–14		NC 21–22			

Alarm and stop contacts are switched by separate cams; both operate together at 18°. Terminals are numbered 1–10 for quick, error-free wiring.

SPECIFICATIONS & ORDERING

Contacts	2 NO + 2 NC, positive break
Rating AC-15	24 V 10 A · 250 V 6 A
Temperature	−45 … +85 °C
Housing	Cast aluminium, safety yellow
Terminal board	10 screw terminals

Standard	IEC/EN 60947-5-1
Rating DC-13	24 V 8 A · 48 V 2 A
Protection	IP65
Cover screws	4 × stainless steel
Mounting	4 × Ø9, 195 × 105 mm

ORDERING CODE

BMH-CPS	31	M20	S
Series Conveyor protection switch	**Model** 31 — PS pull-cord 32 — LS limit	**Cable entry** M20 — 3 × M20×1.5 M25 — 3 × M25×1.5 P21 — 3 × PG21	**Hardware** S — standard X — AISI 316L for corrosive sites

STANDARD PRODUCTS

Catalogue No.	Description
BMH-CPS-31-M20-S	Pull-cord switch, standard
BMH-CPS-31-M20-X	Pull-cord switch, 316L hardware
BMH-CPS-32-M20-S	Limit switch, standard
BMH-CPS-32-M20-X	Limit switch, 316L hardware

ACCESSORIES & SPARES

Catalogue No.	Description
BMH-CPS-K50	Pull-cord kit for 50 m of conveyor
BMH-CPS-SP-L31	Pull-cord lever assembly
BMH-CPS-SP-R50	Roller lever with Ø50 wheel
BMH-CPS-SP-MS	Micro-switch, SPDT
BMH-CPS-SP-TB	Terminal board, 10-pole
BMH-CPS-SP-GS	Gasket and screw set

Spares are kept in stock in Kazakhstan.

SALES
+7 702 245 00 32
sales@bmhsolutions.kz
WhatsApp on the same number

TECHNICAL SUPPORT
technicalsupport@bmhsolutions.kz
Selection, installation, service

WEB & OFFICE
bmh.kz
BMH Solutions LLP
16/1 Bokeikhan St., office 2,
Astana, Kazakhstan

Specifications may change without notice.